HERZ 800 · Drum Cable Winch · D 5243

HPC WINCHES

Technique with heart

HERZ 800

HERZ 800
Drum Cable Winch
with hydraulic
constant motor

The intelligent winch system

DATA 9/10

HERZ 800

Drum cable winch with hydraulic constant motor

Cable layer	Pulling force (kN)	Cable length Cable diameter 16 mm (m)	Cable speed independent of pulling force at 60 liters/16 gall. per minute infinitely variable (m/min)
1st	80	12	0–7.0
2nd	74	25	0–8.0
3rd	67	39	0–8.5
4th	61	55	0–9.0

Standards	DIN 15020

Steel cable

Cable properties	6 x 22 Warrinton Seal-SES-zn k
Diameter	16 mm (~0.6")
Cable length	55 m (~180 ft)
End connection	casting thimble acc. DIN 3091
Calculated break load	268 kN
Rated strength	1960 N/mm^2
Safety factor	1:3

Cable spool

Automatic spooling device	standard

Weights

As per drawing no. D 5243	approx. 205 kg without cable
Winch set complete	approx. 425 kg with cable

Getriebe

Drive transmission acc. DIN 15020	1 Cm
Planetary gear F13	2 step
Ratio	i = 40:1
Input revolutions	375 min^{-1}
Drum torque	11000 Nm

Drum clutch

Manual unreeling w/o load	mechanically operated
Optional (depending on installation)	pneumatically operated

Hydraulic motor

Type	slow runner, 160 cm^3
Operating pressure	Δp = ~170 bar
Maximum capacity	60 l/min (~16 gpm)

HPC WINCHES

Technique with heart

Hydraulic laminae brake	
Brake torque	350 Nm

Overload safety device	
Automatic relief valve	standard for open hydraulic circuit

Hydraulics ex-PTO

Hydraulic pump	
Model	FP 20.40
Turning direction	reversible
Operating pressure	$\Delta p = \sim 170$ bar (~2400 psi)
Max. pressure	240 bar (3400 psi)
Capacity	40 cm^3 (~2.44 cu. in.)
Connection to PTO	B8 x 32 x 36 mm acc. DIN 5462

Hydraulic tank	
Dimensions in mm (inches)	375 x 600 x 290 (15 x 25 x 11)
Contents	~ 60 liters (~16 gall)
Filter system	reflux filtration
Oil level check	sight glass

Control valve	proportional
Operation	pneumatic remote from inside cab.

Vehicle PTO*	disengageable
Min. continuous output	15 kW
Ratio	$i \geq 1$
Connection	without flange

*PTO not included in HPC winch package

Optional against extra charge:
We offer various extra equipment.
Please consult our brochure "optional equipment".

Drawing no. D 5243

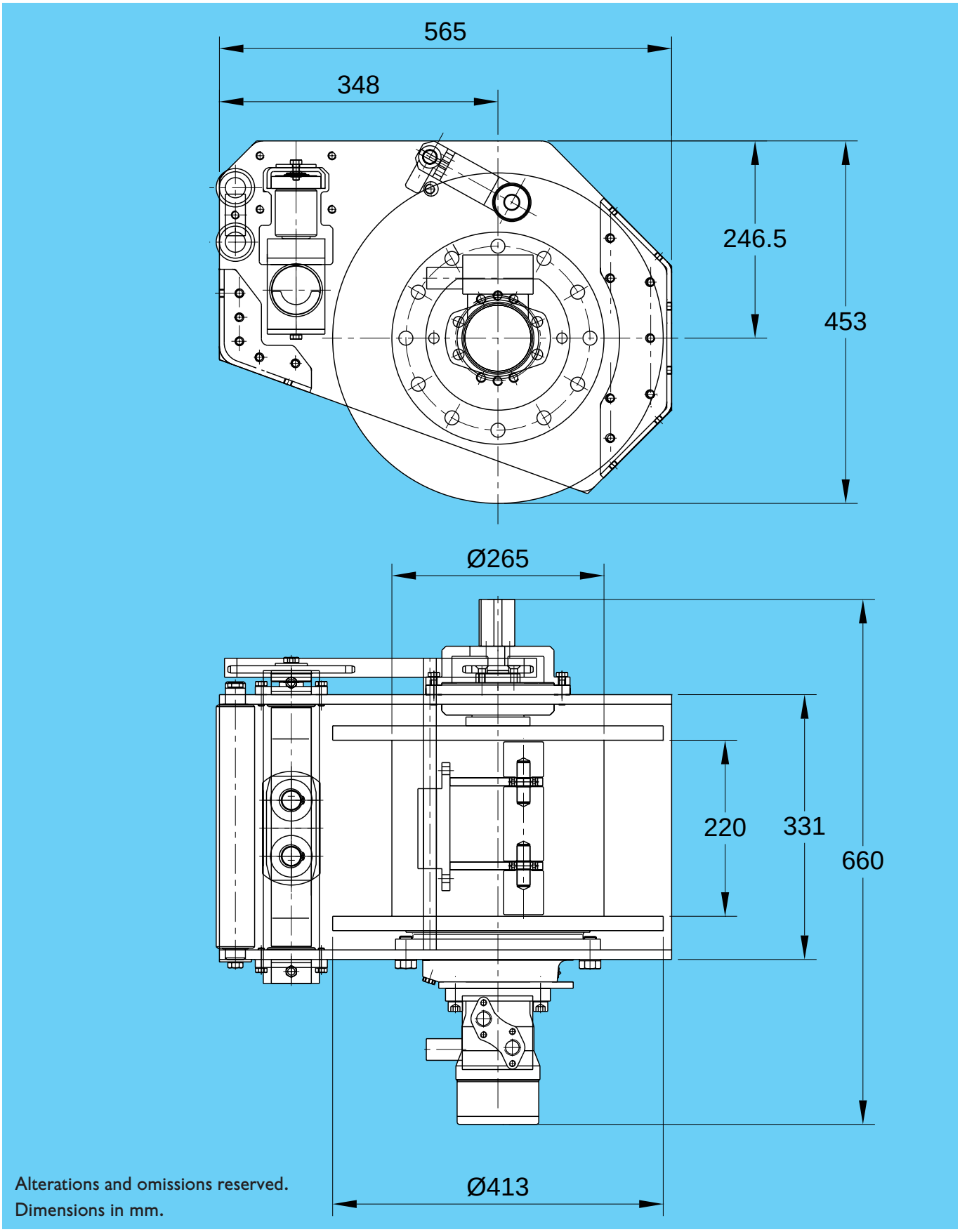

Alterations and omissions reserved.
Dimensions in mm.

Mounting a cable winch

Cable winches can be mounted on a truck at the following positions:

- in front of the cab
- behind the cab
- mid-ships between or lateral outside the frame rails
- in the rear of the vehicle

Hydraulic drives already provided in a truck (for tipper, crane etc.) may be used to power the winch as well. Prior consultation with HPC is encouraged.

The HERZ 800 is fully hydraulically driven. The drum integrated planetary gears result in compact dimensions. The vehicle's PTO drives the hydraulic pump which in turn drives the drum integrated hydraulic motor.

The hydraulic pressure relief valve is factory preset and sealed. It serves to prevent overloads.

Cable pressure roller
Prevents uneven spooling of the steel rope onto the drum and therefore damage to the cable.

Automatic rope spooling device
The HERZ 800 comes with an automatic spooling device to properly spool the cable even when pulled at up to 25° angles.

Cable brake
When re-spooling the cable without load, a counter pulling force is required to prevent the cable from looping. The HERZ 800 therefore comes with a standard friction brake to ensure tight cable layers.

Rope guiding window
The rope guiding window prevents the rope from contact with the chassis and from jamming when pulled-in. It ensures smooth on/off-reeling of the rope up to 15° angles.

POB 1207
D-86345 Neusäß / Augsburg

Fax +49-8 21-2 46 71 22
www.hpc-maschinenbau.de
info@hpc-maschinenbau.de

S & U 0009.1000